1947-49 STUDEBAKER CHAMPION & COMMANDER

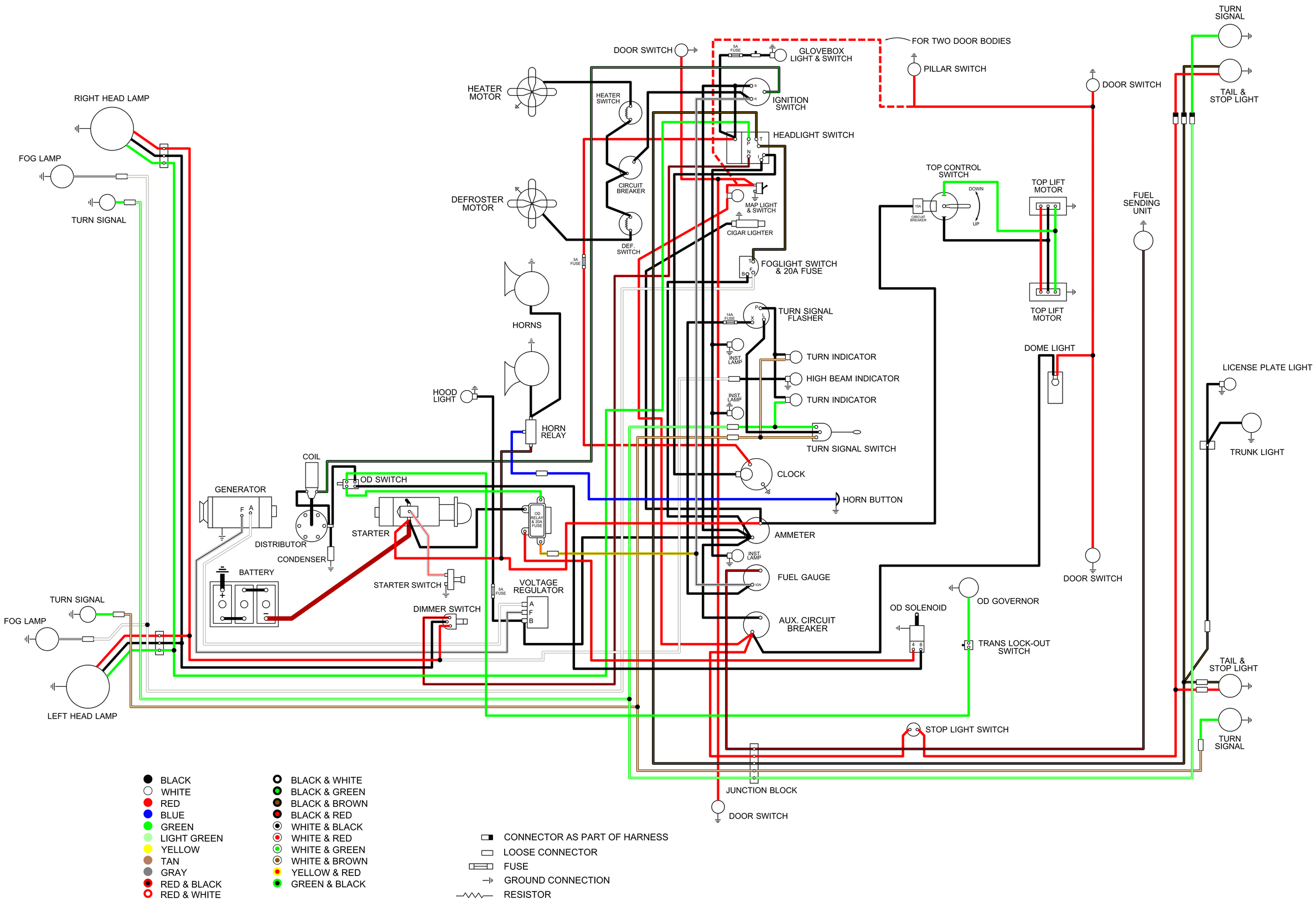

CINCO

1947-49 STUDEBAKER CHAMPION & COMMANDER

MAIN POWER

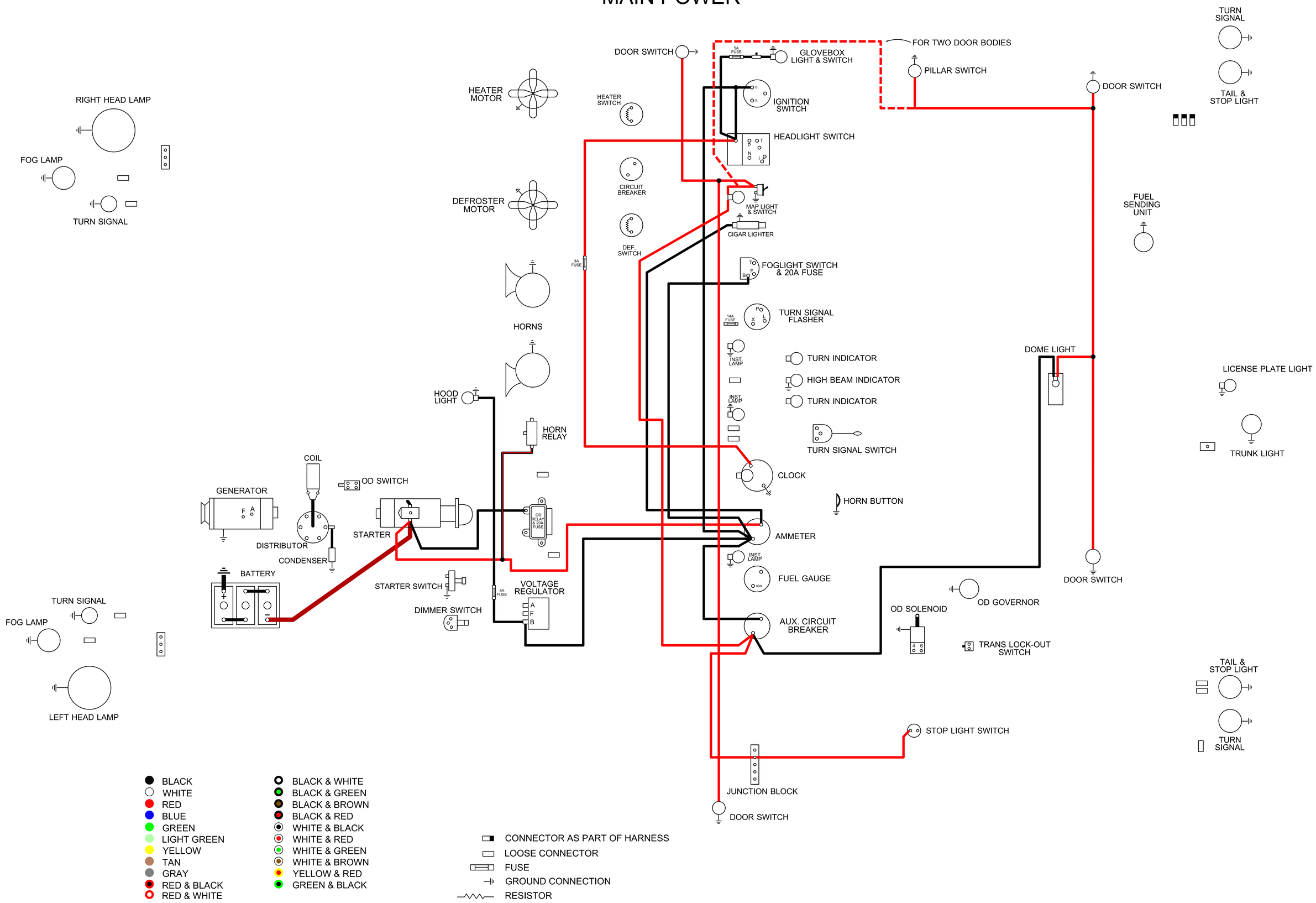

CINCO

1947-49 STUDEBAKER CHAMPION & COMMANDER

ACCESSORY POWER

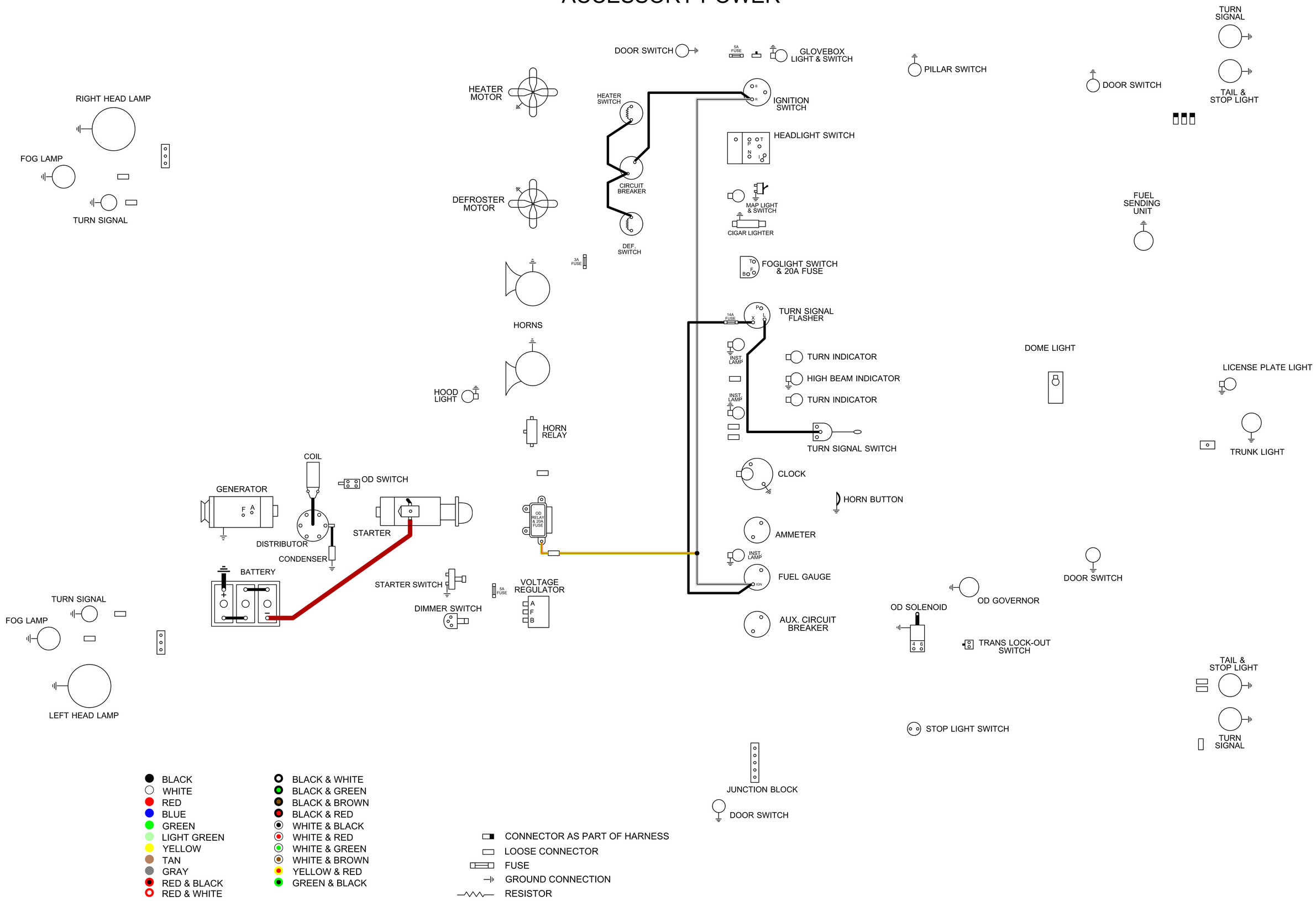

CINCO

1947-49 STUDEBAKER CHAMPION & COMMANDER

STARTER

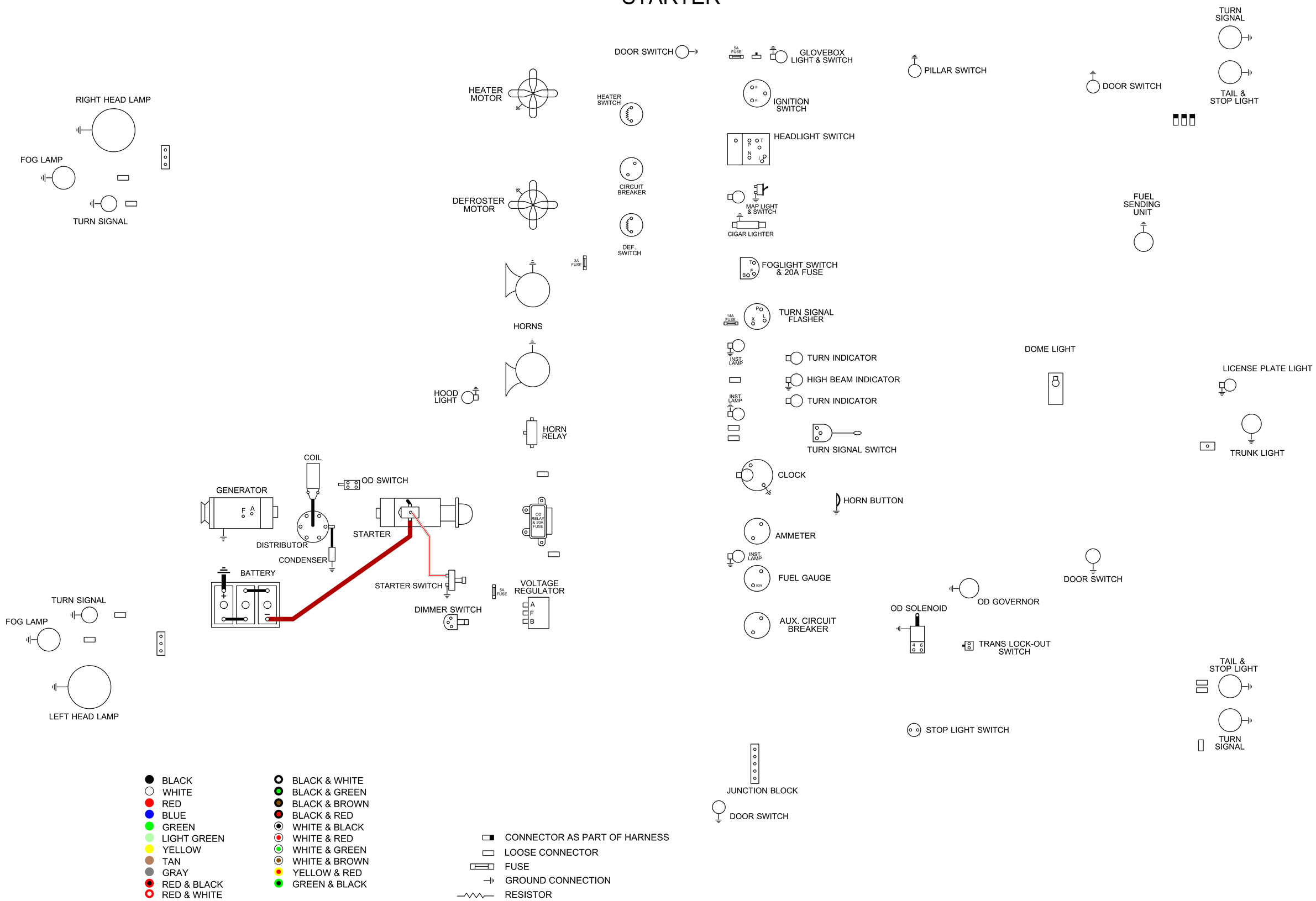

CINCO

1947-49 STUDEBAKER CHAMPION & COMMANDER

IGNITION SYSTEM

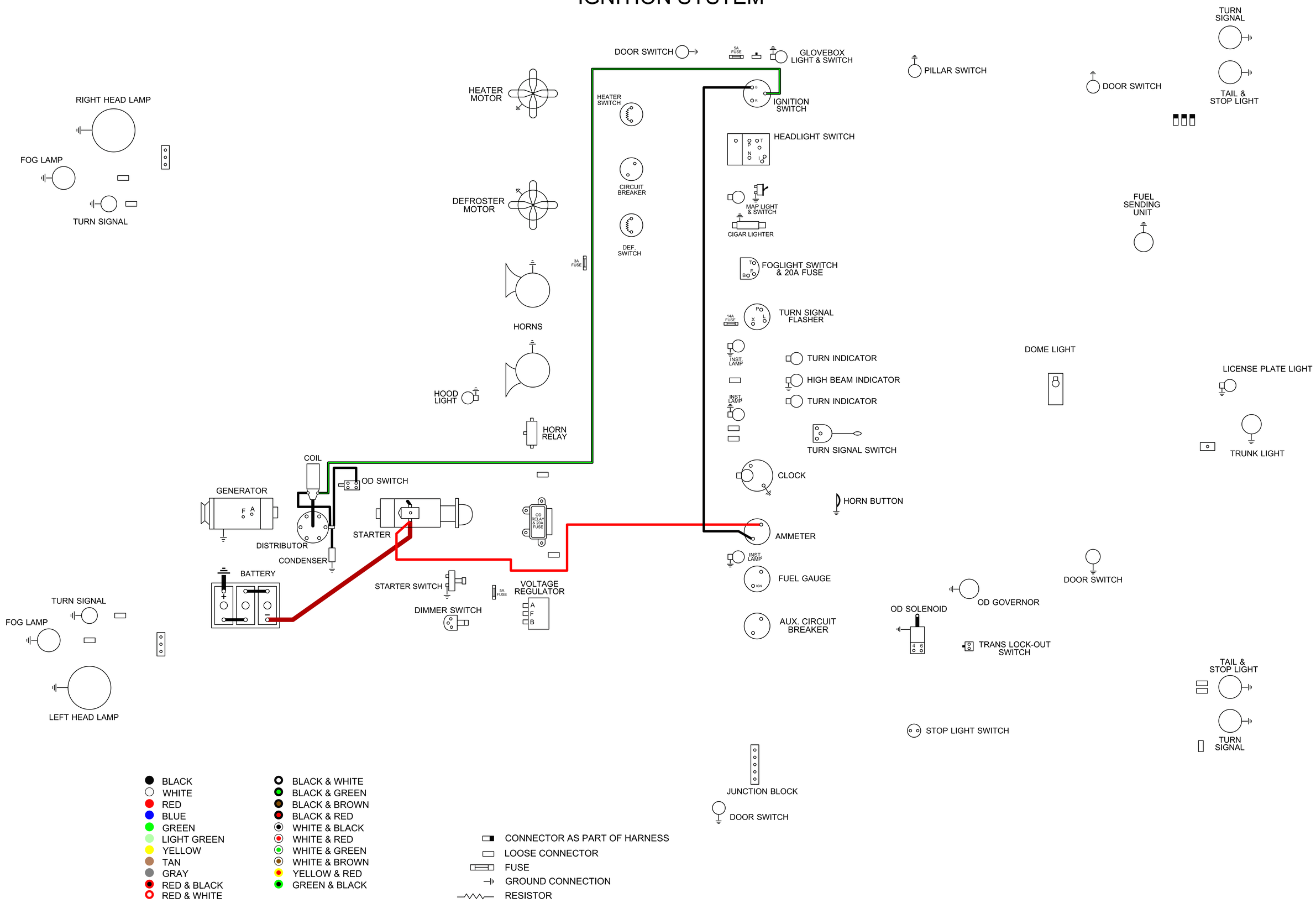

CINCO

1947-49 STUDEBAKER CHAMPION & COMMANDER

CHARGING SYSTEM

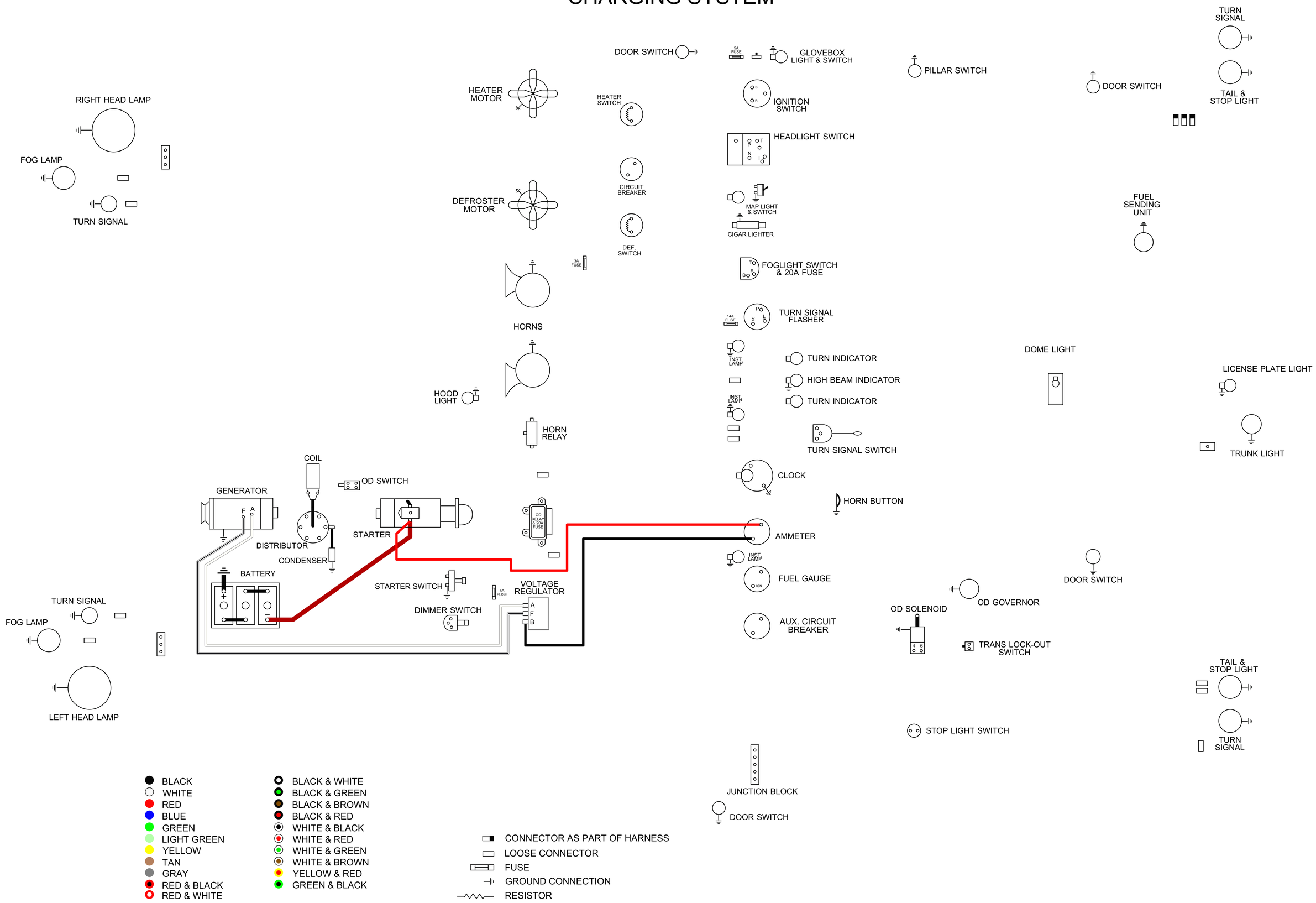

CINCO

1947-49 STUDEBAKER CHAMPION & COMMANDER

HEADLIGHTS & FOG LIGHTS

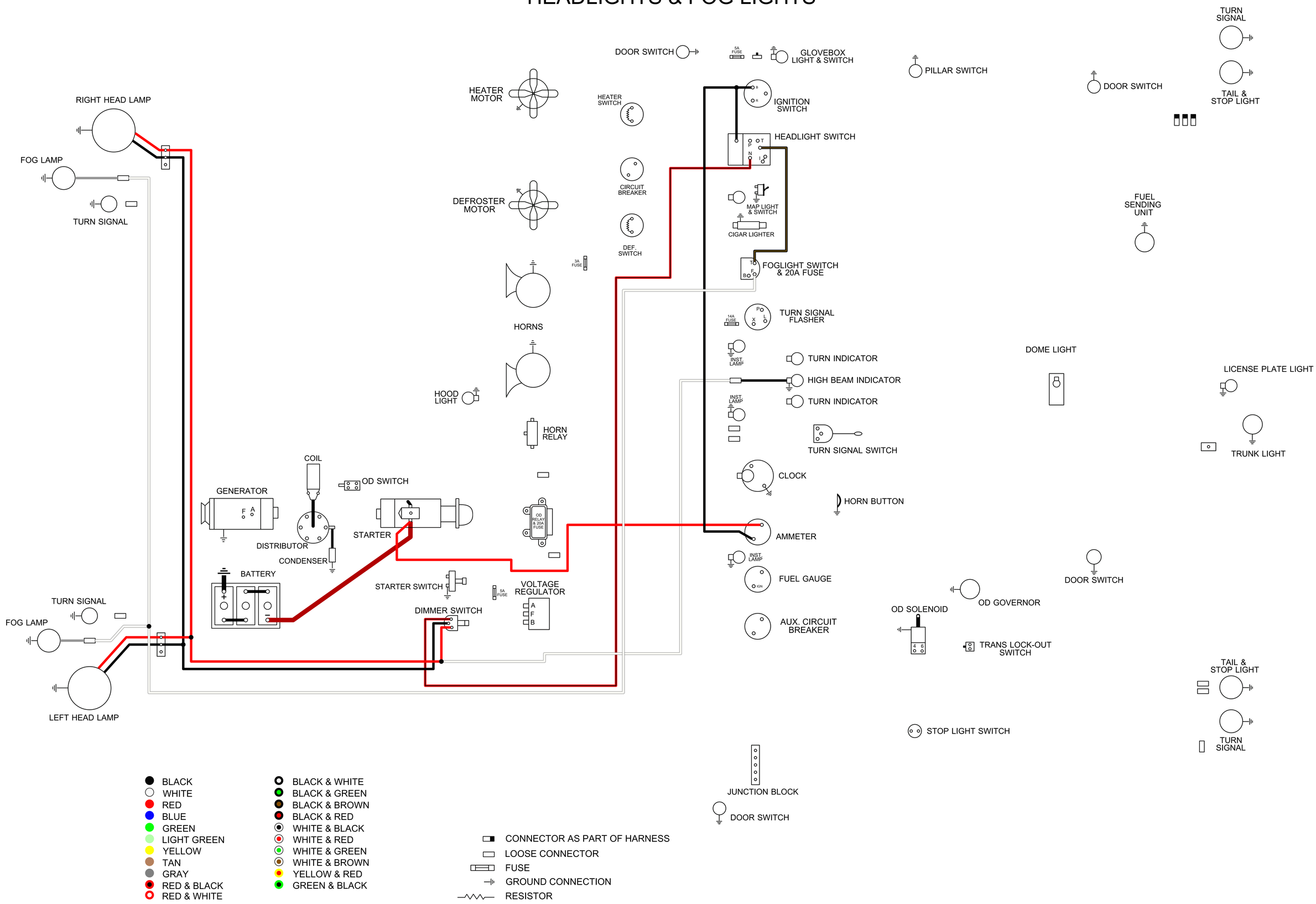

CINCO

1947-49 STUDEBAKER CHAMPION & COMMANDER

RUNNING LIGHTS

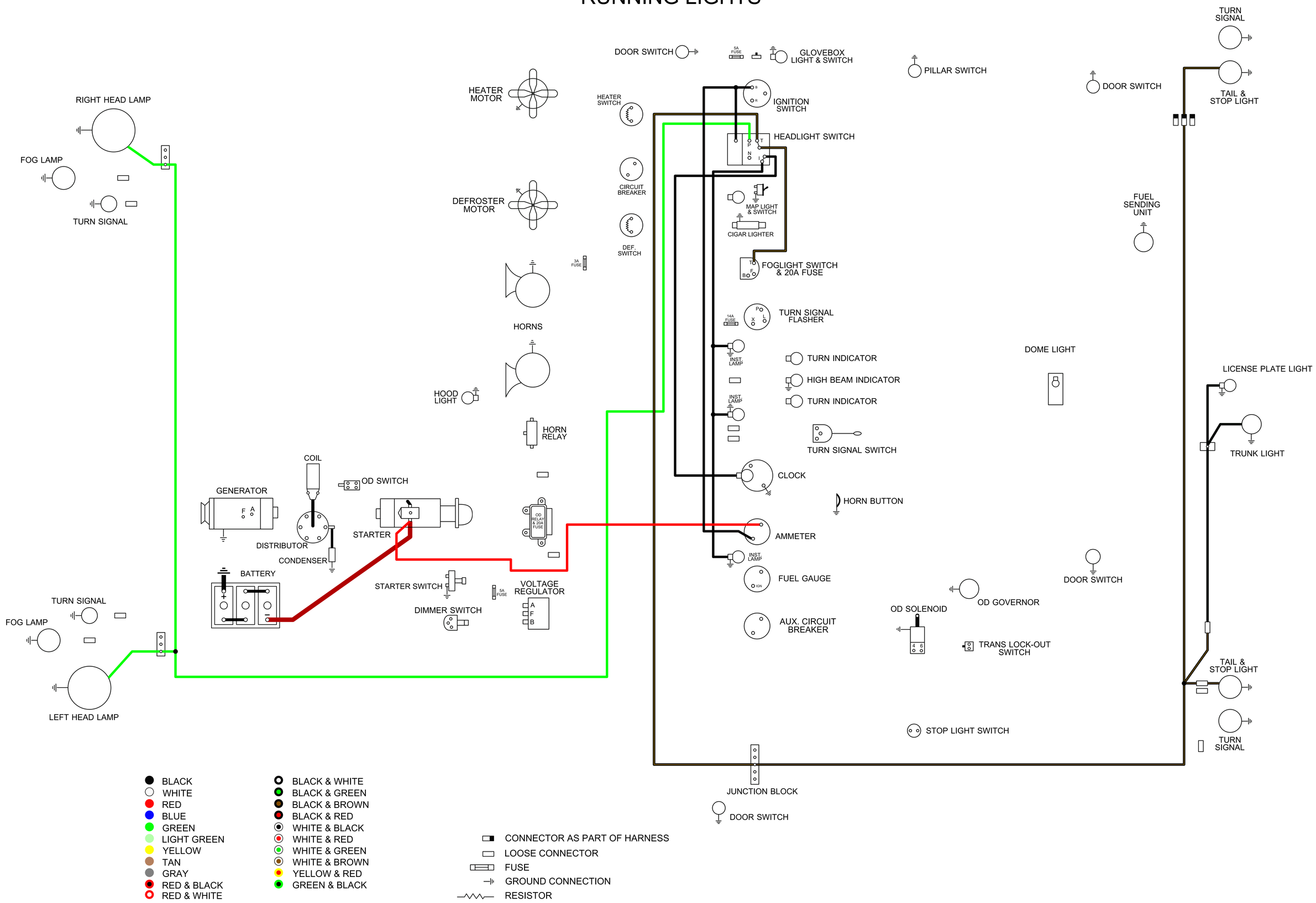

CINCO

1947-49 STUDEBAKER CHAMPION & COMMANDER

BRAKE LIGHTS

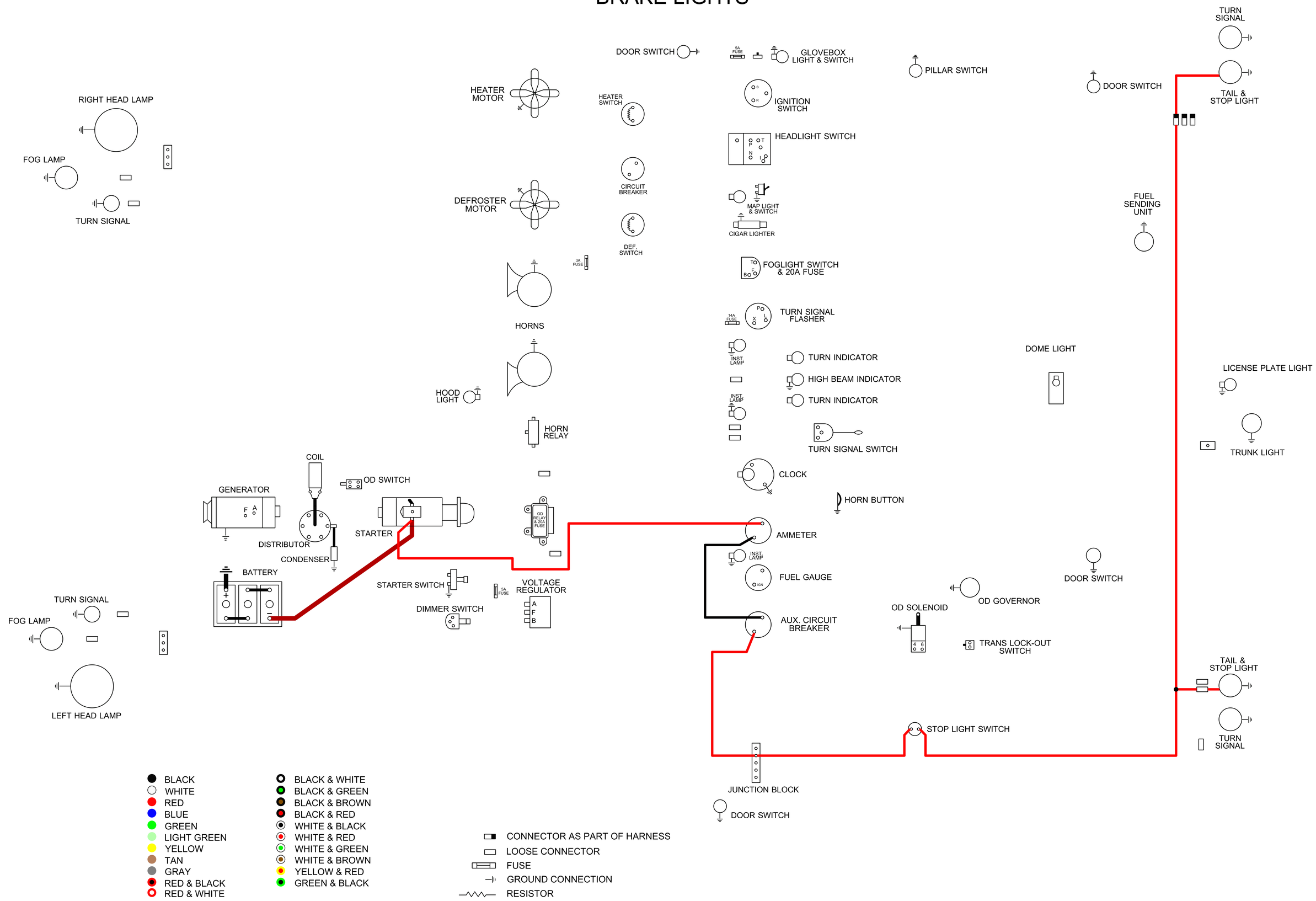

CINCO

1947-49 STUDEBAKER CHAMPION & COMMANDER

TURN SIGNALS

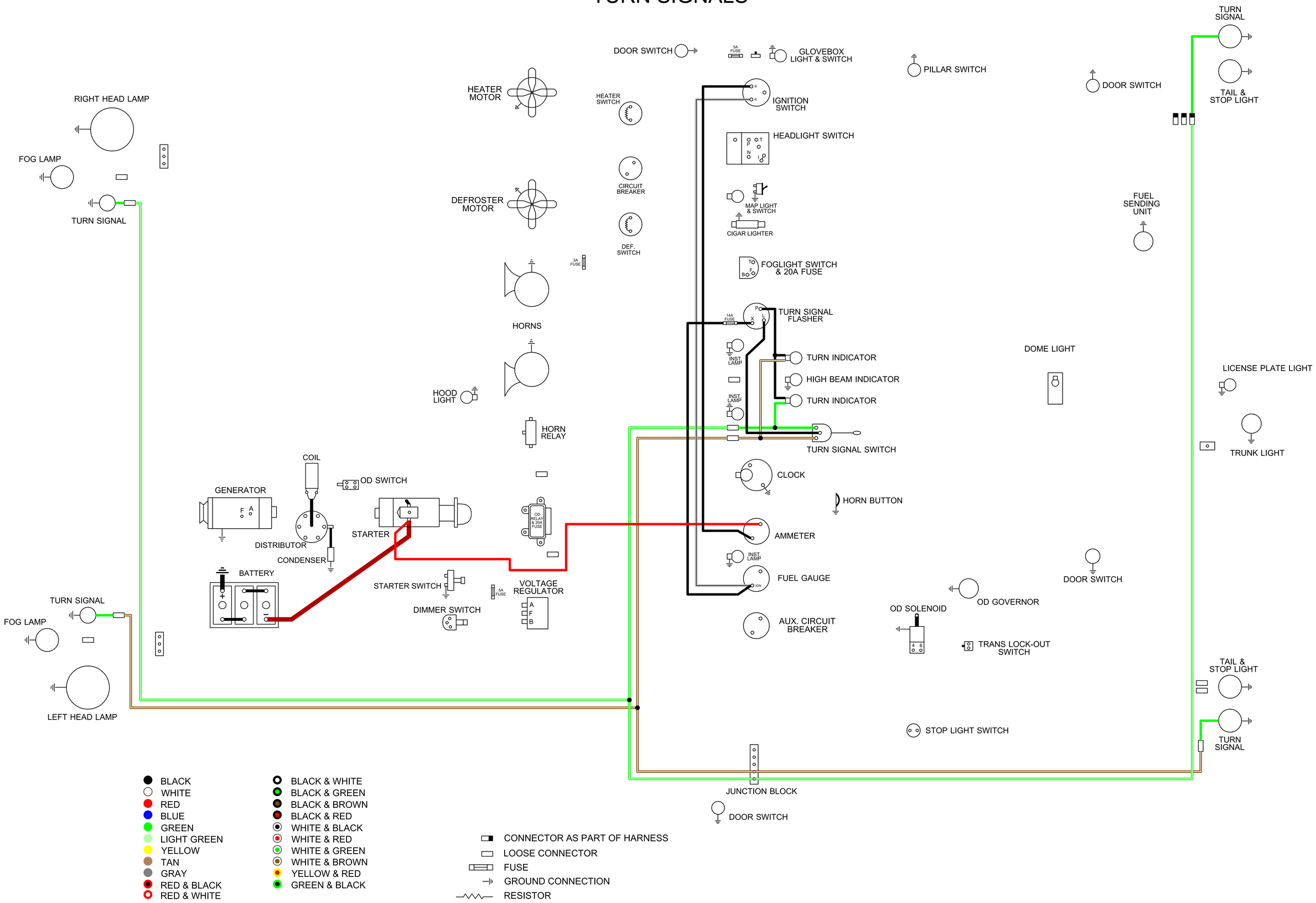

CINCO

1947-49 STUDEBAKER CHAMPION & COMMANDER

HEATER

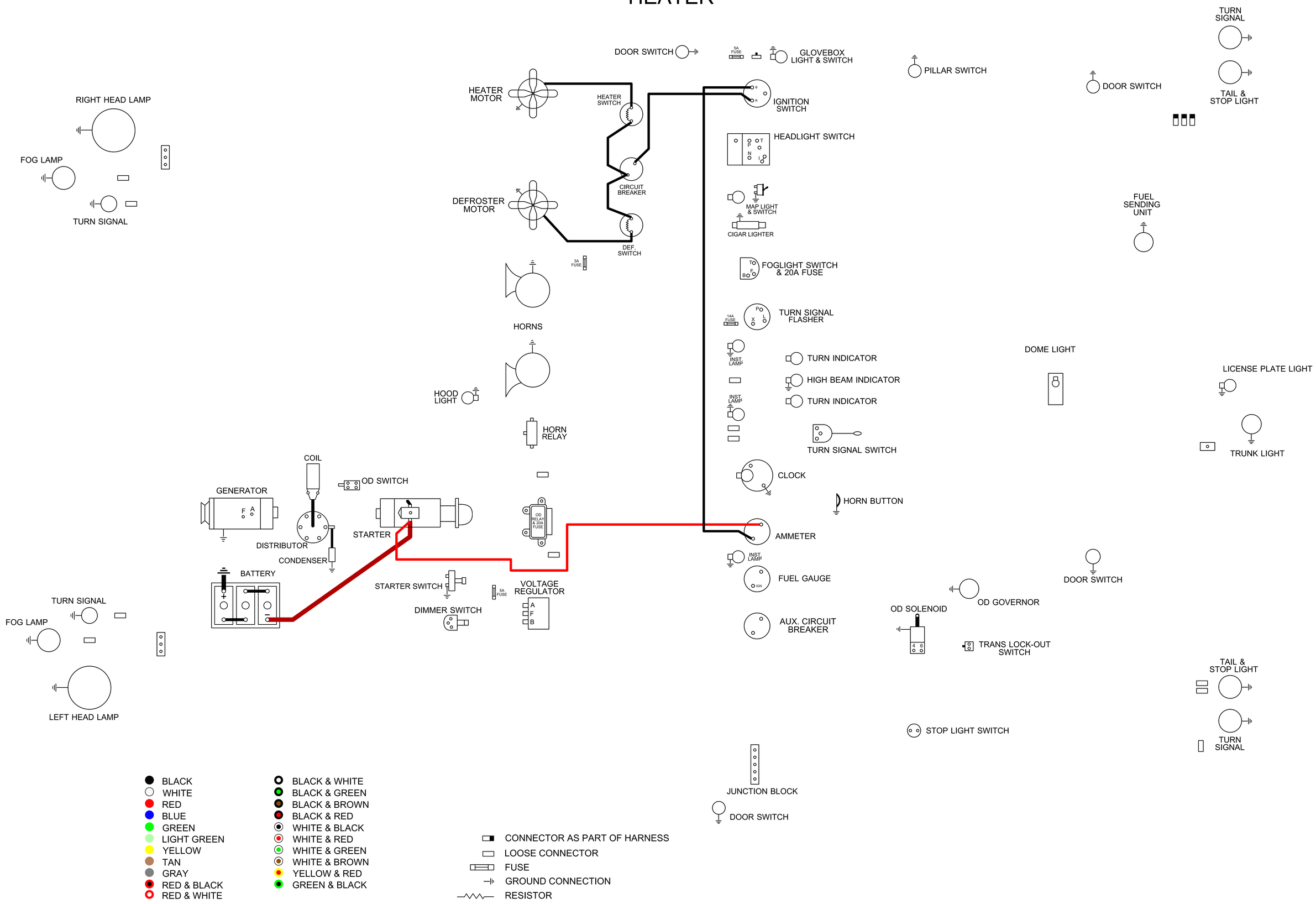

CINCO

1947-49 STUDEBAKER CHAMPION & COMMANDER

HORN

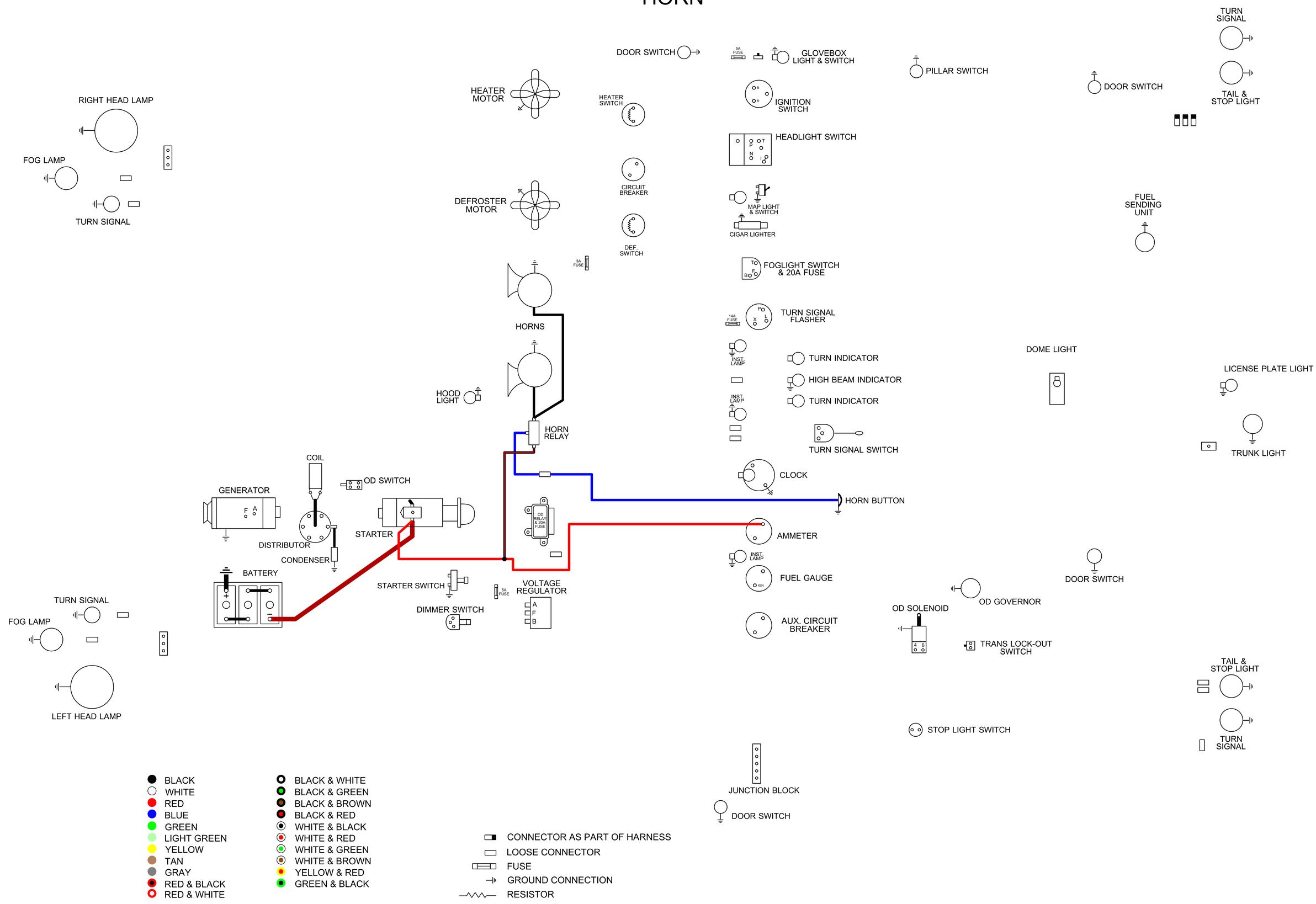

CINCO

1947-49 STUDEBAKER CHAMPION & COMMANDER

OVERDRIVE

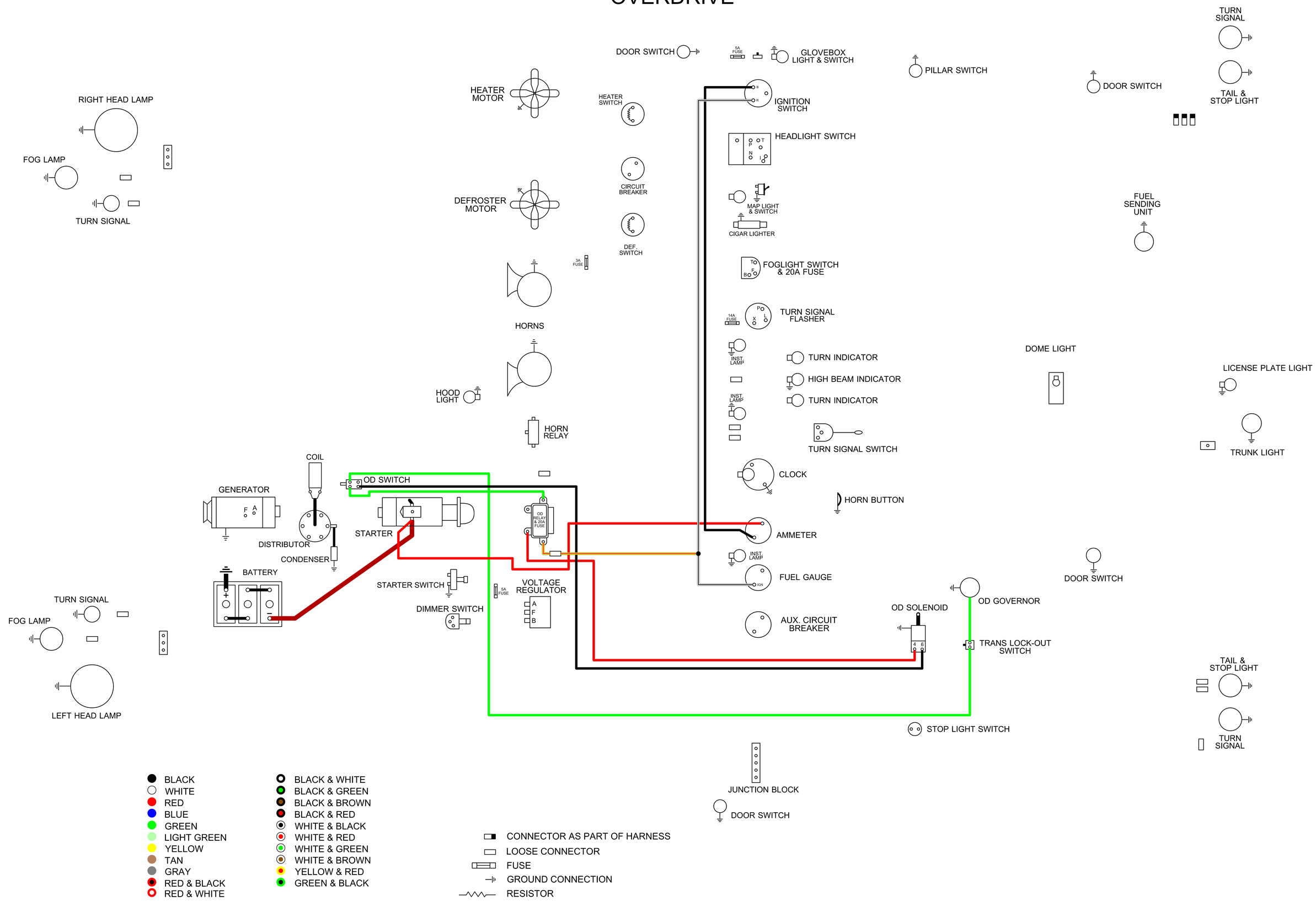

CINCO

1947-49 STUDEBAKER CHAMPION & COMMANDER

GAUGES

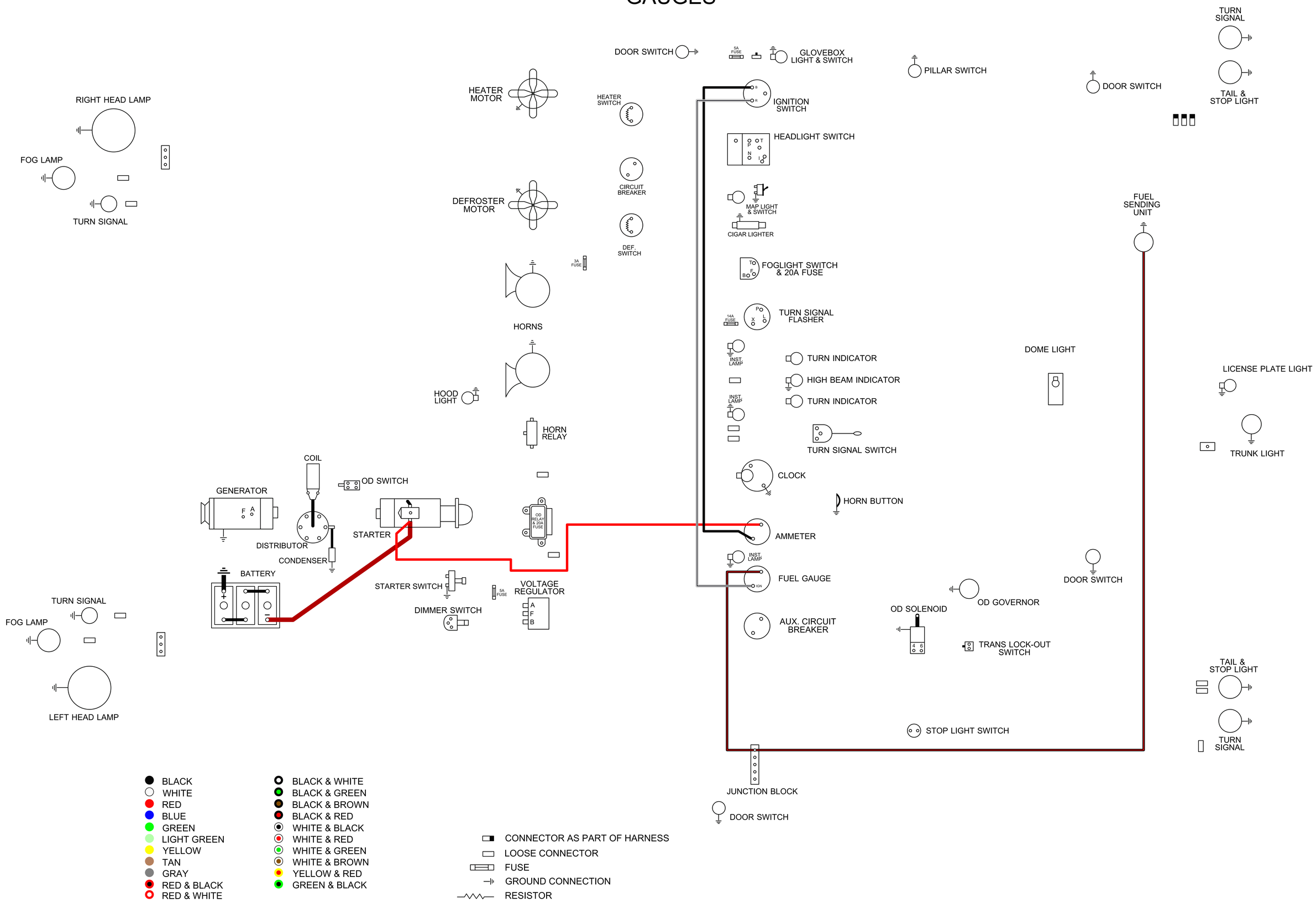

CINCO

1947-49 STUDEBAKER CHAMPION & COMMANDER

CONVERTIBLE TOP

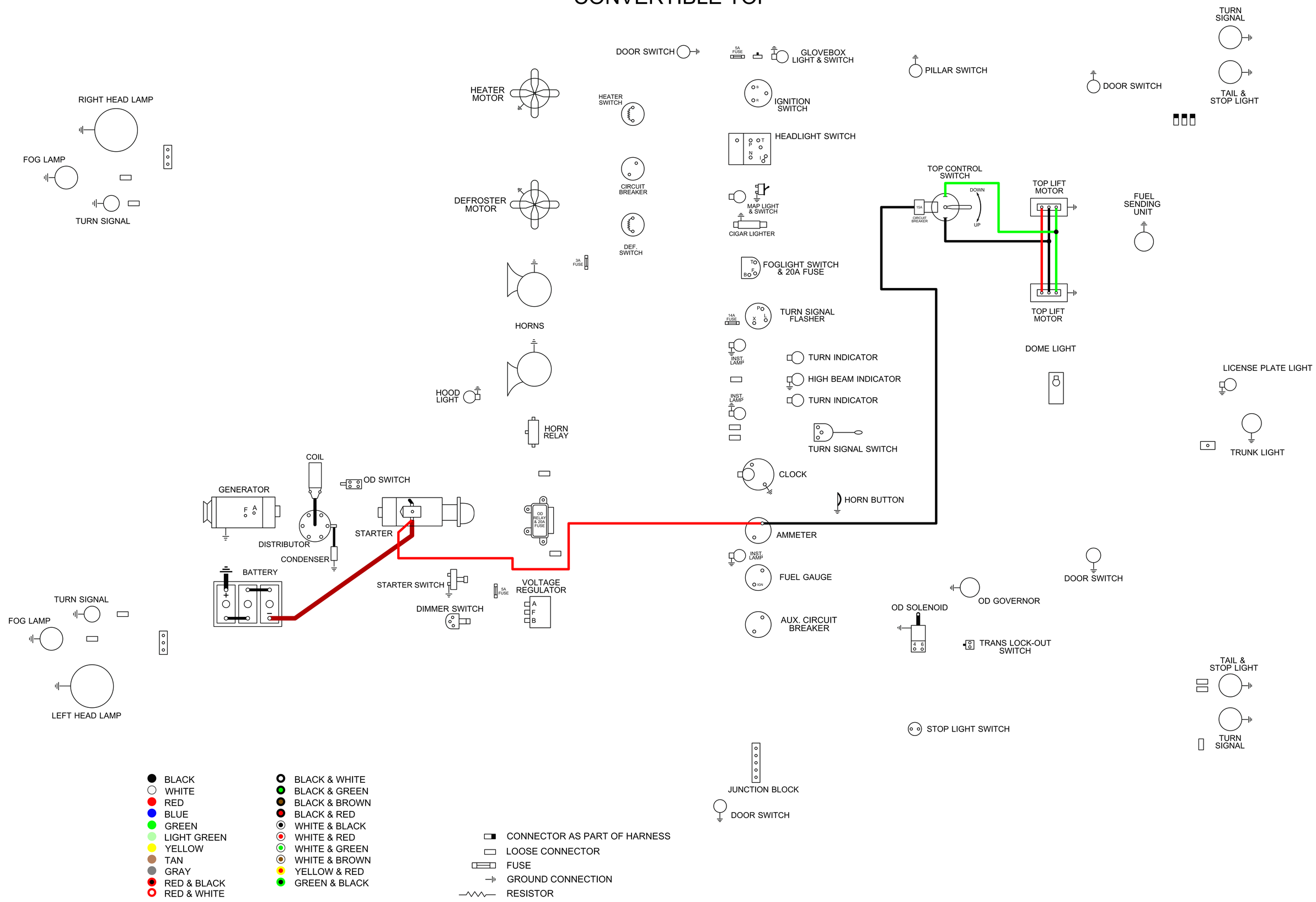

CINCO